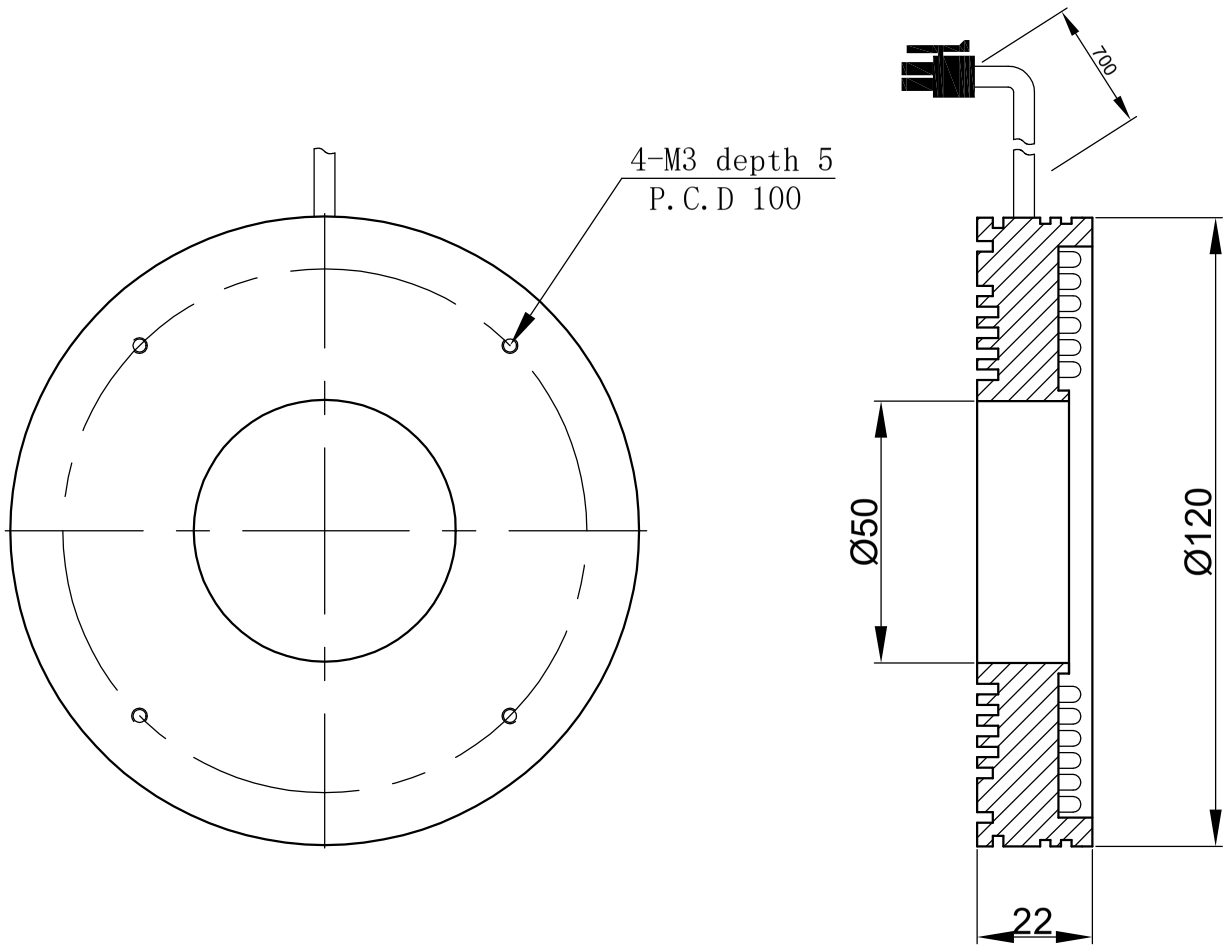


| SPECIFICATIONS PARAMETER | |
|---|---|
| OPERATING VOLTAGE | DC24-26V |
| RATED CURRENT | IR、R/W、G、B、V 420/540mA |
| RATED POWER | IR、R/W、G、B、V 10/13W |
| PEAK CURRENT | IR、R/W、G、B、V 800/1000mA |
| PEAK POWER | IR、R/W、G、B、V 19/24W |
| WAVELENGTH OF LIGHT | IR 940nm、830 nm |
| | R 620-625nm |
| | G 520-530nm |
| | B 465-470nm |
| | V 365-400nm |
| | W 6500-8000K |

Wellinvision

| | | | |
|---|---|---|---|
| PART NAME | HL-R0-120-6 | DATE | 2013-9-11 |
| | | DWN. BY | |
| UNIT: mm | TITLE DRAWING LAYOUT | CHKD. BY | |
| | | APPD. BY | |
| | | DWG. NO | |