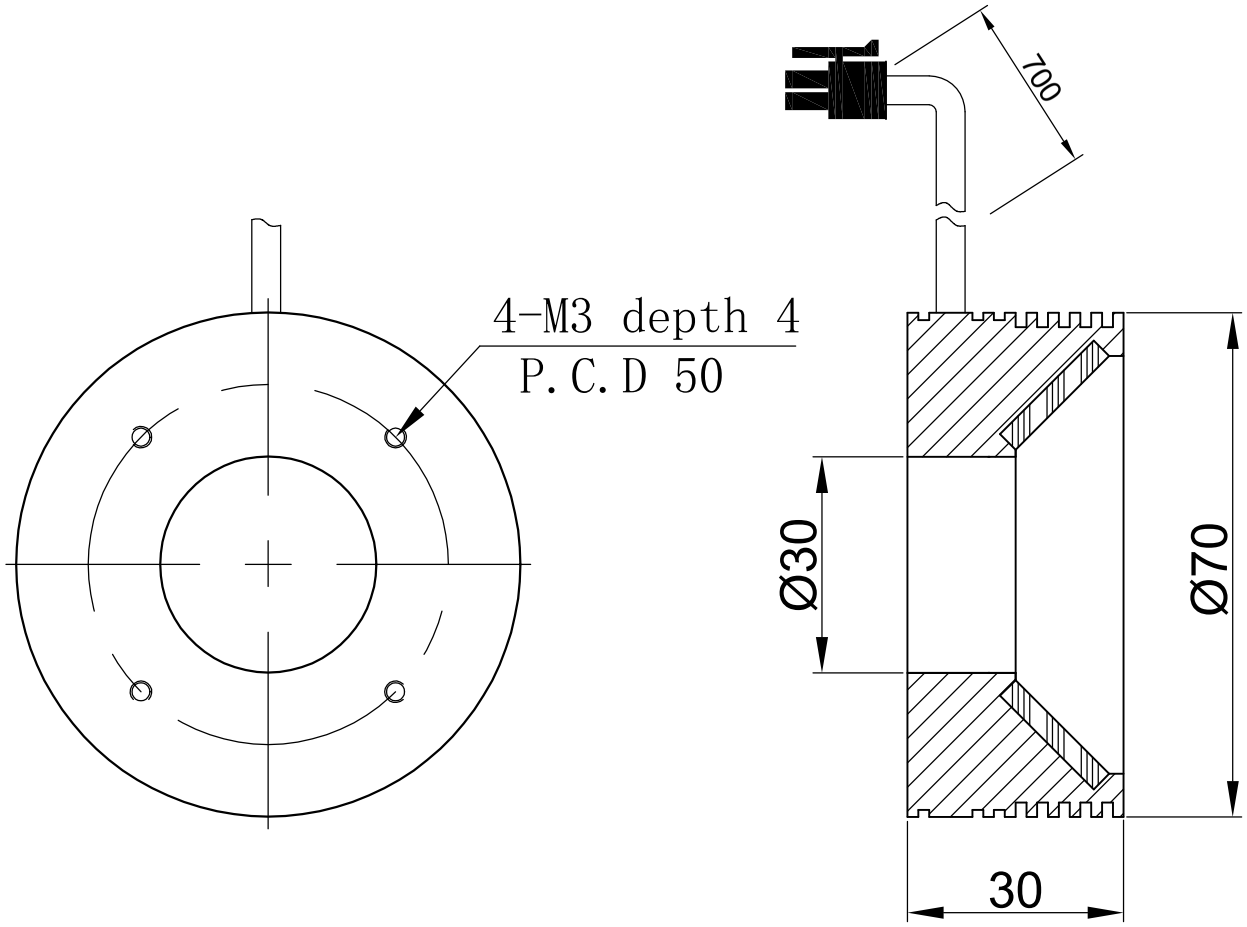

SPECIFICATIONS PARAMETER	
OPERATING VOLTAGE	DC24-26V
RATED CURRENT	IR、R/W、G、B、V 160/200mA
RATED POWER	IR、R/W、G、B、V 3.8/4.8W
PEAK CURRENT	IR、R/W、G、B、V 290/360mA
PEAK POWER	IR、R/W、G、B、V 7/8.6W
WAVELENGTH OF LIGHT	IR 940nm、850 nm
	R 620-625nm
	G 520-530nm
	B 465-470nm
	V 365-400nm
	W 6500-7000K

Wellinvision

PART NAME	HL-RD45-70-3		DATE	2013-10-12
			DWN. BY	
UNIT: mm	TITLE	DRAWING LAYOUT	CHKD. BY	
			APPD. BY	
			DWG. NO	