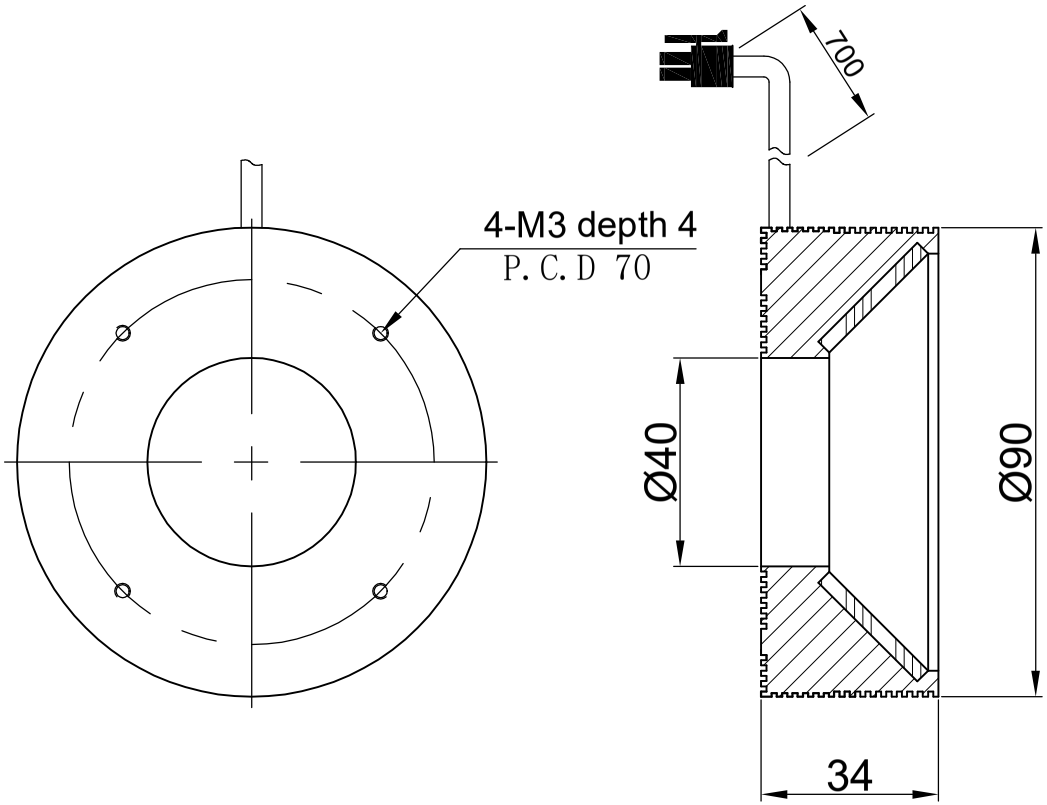

SPECIFICATIONS PARAMETER	
OPERATING VOLTAGE	DC24-26V
RATED CURRENT	IR、R/W、G、B、V 220/280mA
RATED POWER	IR、R/W、G、B、V 5.6/7W
PEAK CURRENT	IR、R/W、G、B、V 390/500mA
PEAK POWER	IR、R/W、G、B、V 9.4/12W
WAVELENGTH OF LIGHT	IR 940nm、850 nm
	R 620-625nm
	G 520-530nm
	B 465-470nm
	V 365-400nm
	W 6500-7000K

Wellinvision

PART NAME	HL-RD45-90-4			DATE	2013-9-23
				DWN. BY	
UNIT: mm	TITLE	DRAWING LAYOUT		CHKD. BY	
				APPD. BY	
				DWG. NO	