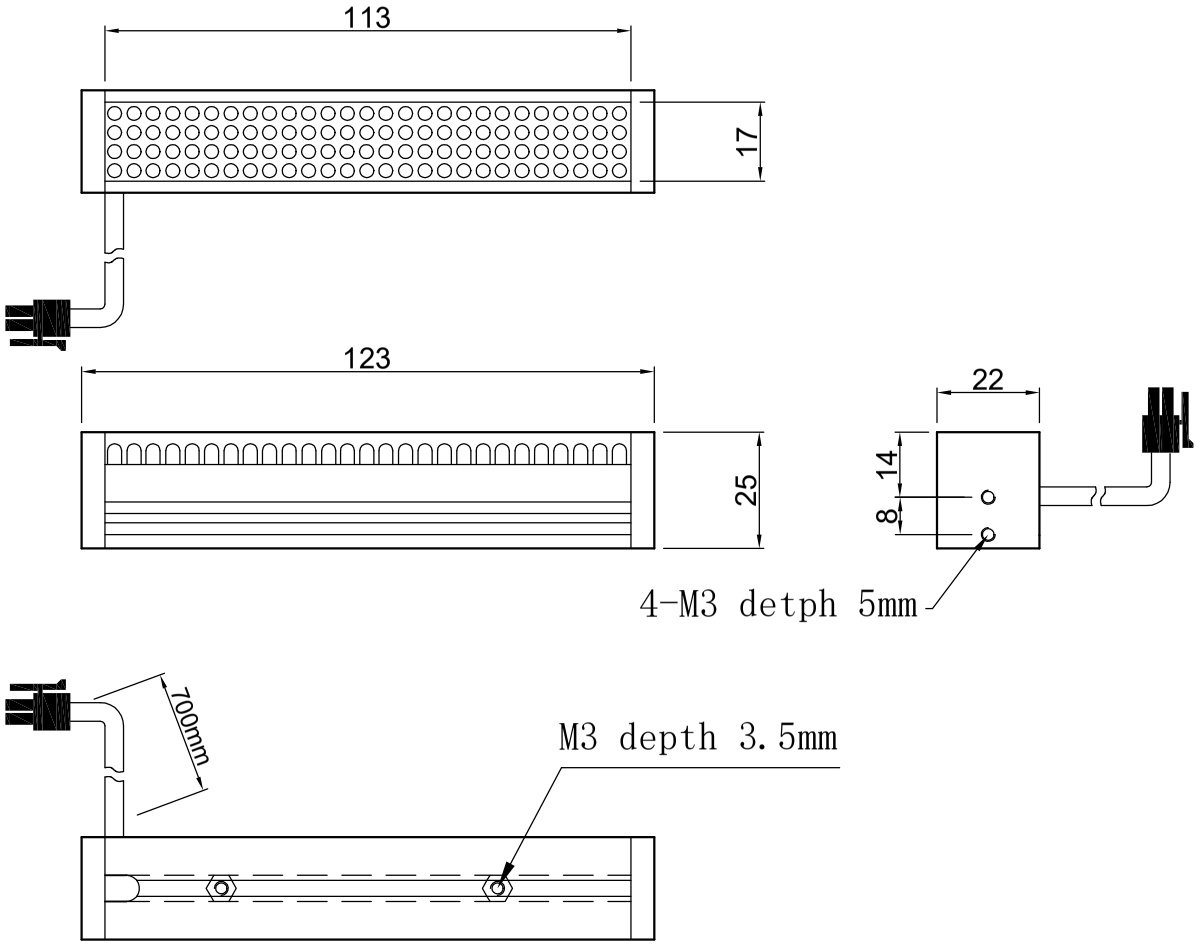

SPECIFICATIONS PARAMETER	
OPERATING VOLTAGE	DC24-26V
RATED CURRENT	135mA
RATED POWER	3.24W
PEAK CURRENT	270mA
PEAK POWER	6.48W
WAVELENGTH OF LIGHT	R 620-625nm

Wellinvision

PART NAME	HL-LN-113-R	DATE	2013-9-23
		DWN. BY	
UNIT: mm	TITLE DRAWING LAYOUT	CHKD. BY	
		APPD. BY	
		DWG. NO	