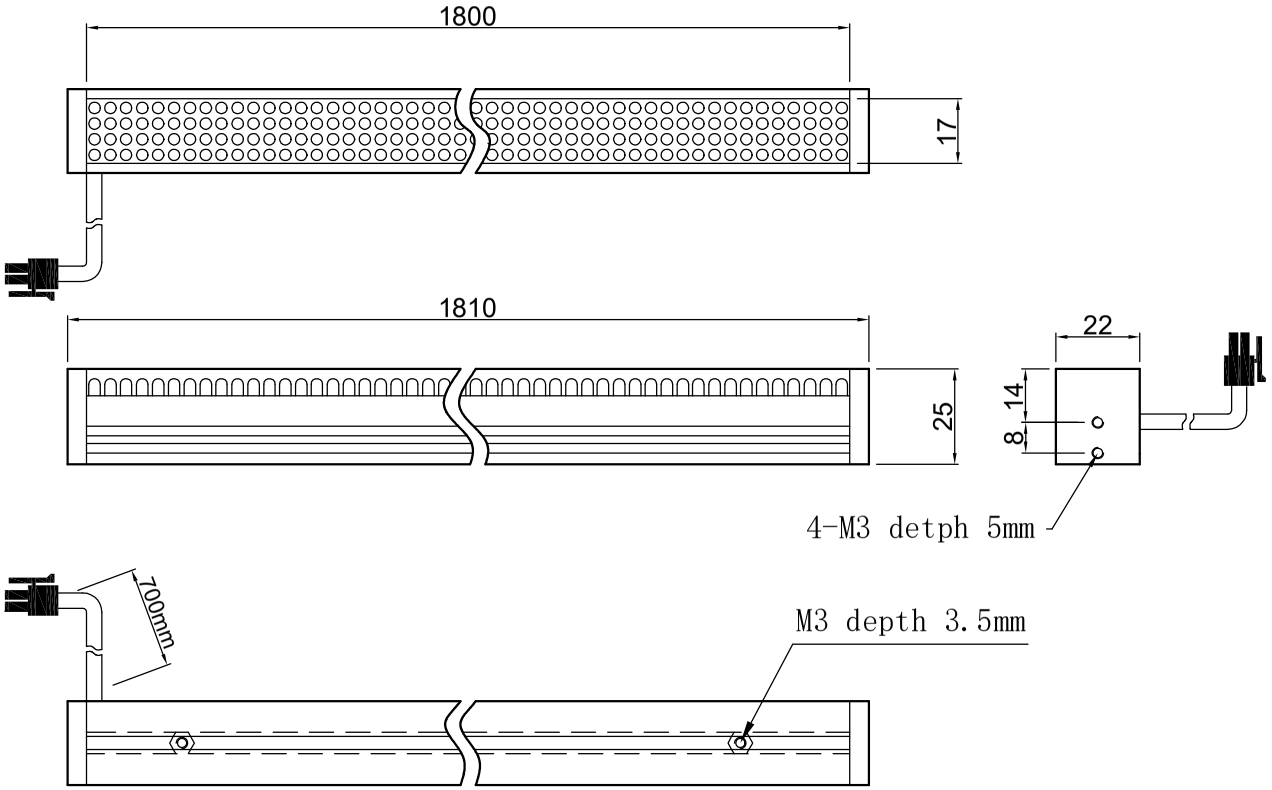

SPECIFICATIONS PARAMETER	
OPERATING VOLTAGE	DC48V
RATED CURRENT	IR、R/W、G、B 1.3/1.6A
RATED POWER	IR、R/W、G、B 62.4/76.8W
PEAK CURRENT	IR、R/W、G、B 2.6/3.2A
PEAK POWER	IR、R/W、G、B 124.8/153.6W
WAVELENGTH OF LIGHT	IR 850-940nm
	R 620-625nm
	G 520-530nm
	B 465-470nm
	W 6500-8000K

Wellinvision

PART NAME	HL-LN-2400			DATE	2015-9-11
UNIT: mm	TITLE	DRAWING LAYOUT		DWN. BY	
				CHKD. BY	
				APPD. BY	
				DWG. NO	