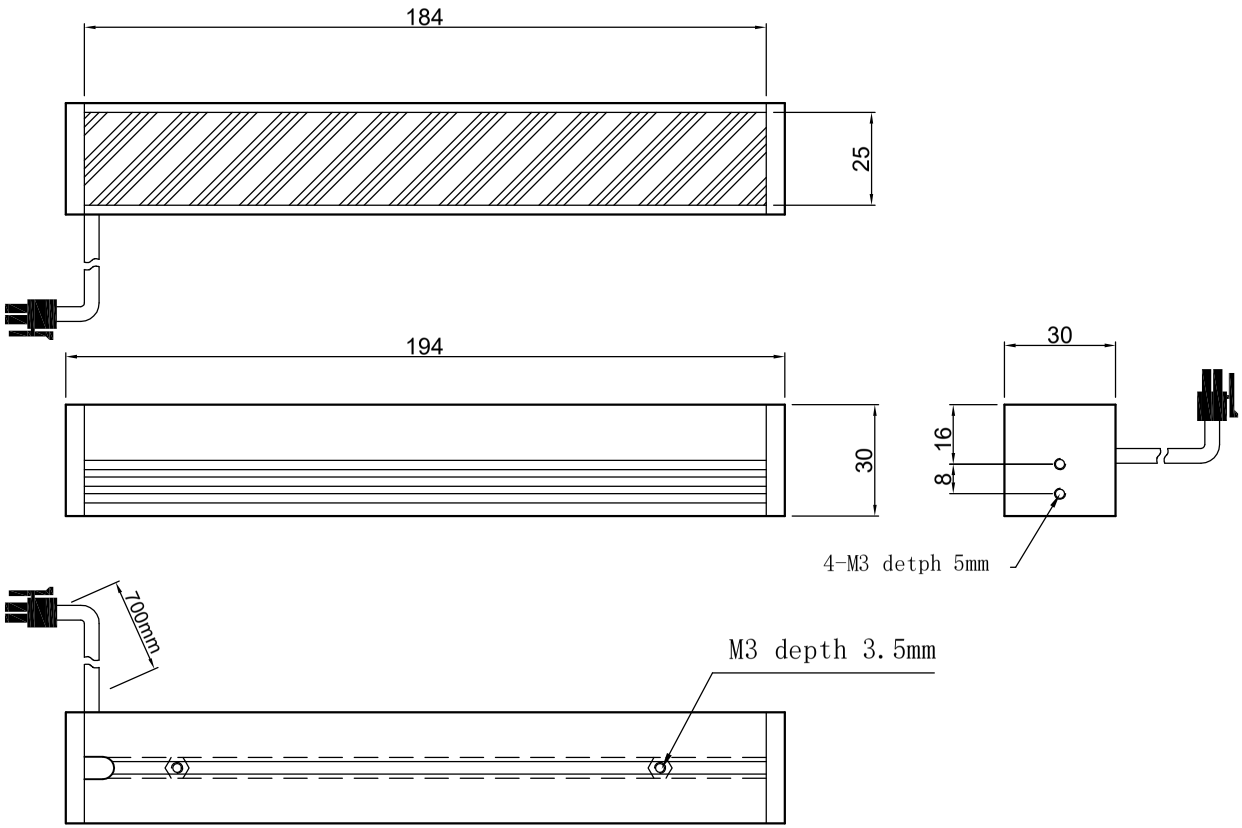

SPECIFICATIONS PARAMETER	
OPERATING VOLTAGE	DC24-26V
RATED CURRENT	IR / W、G、B 250/370mA
RATED POWER	IR / W、G、B 6/8.88W
PEAK CURRENT	IR / W、G、B 500/740mA
PEAK POWER	IR / W、G、B 12/17.76W
WAVELENGTH OF LIGHT	IR 850-940nm
	G 520-530nm
	B 465-470nm
	W 6500-8000K

Wellinvision

PART NAME	HL-LWD-184	DATE	2013-9-23
		DWN. BY	
UNIT: mm	TITLE DRAWING LAYOUT	CHKD. BY	
		APPD. BY	
		DWG. NO	