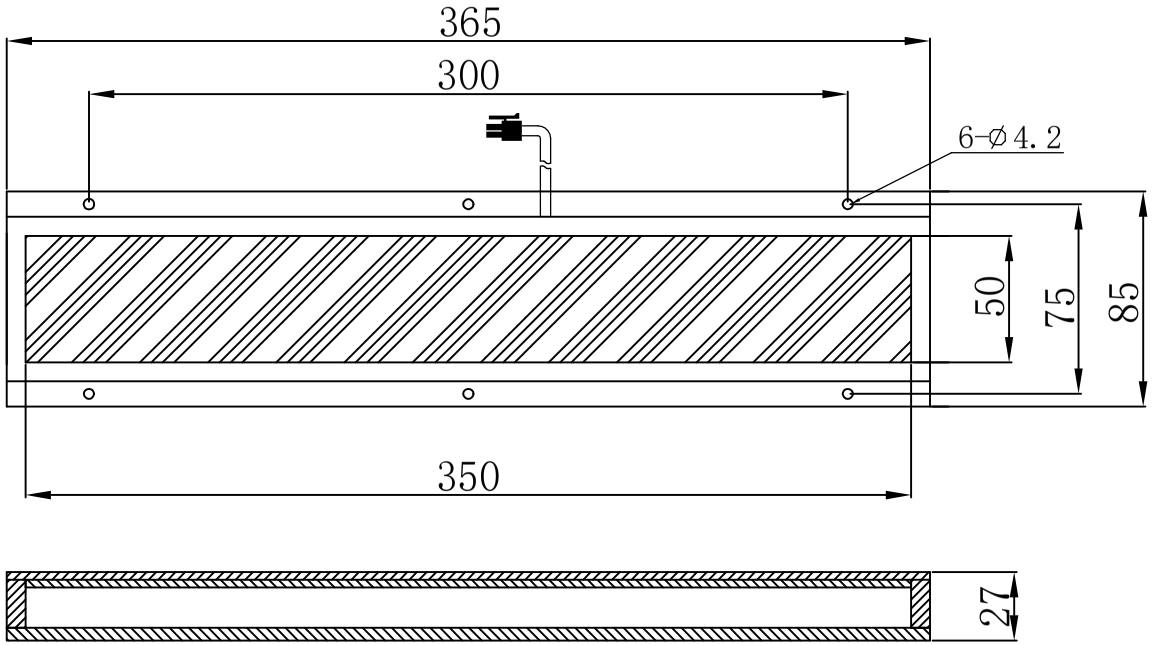

SPECIFICATIONS PARAMETER	
OPERATING VOLTAGE	DC24-26V
RATED CURRENT	R、R/W、G、B 405/540mA
RATED POWER	R、R/W、G、B 8.64/13W
PEAK CURRENT	R、R/W、G、B 720/870mA
PEAK POWER	R、R/W、G、B 17.6/21W
WAVELENGTH OF LIGHT	R 850 nm
	R 620-625nm
	G 520-530nm
	B 465-470nm
	V 365-400nm
	W 6500-7000K

Wellinvision

PART NAME	HL-BKP-50-350	DATE	2018-08-16
		DWN. BY	
UNIT: mm	TITLE DRAWING LAYOUT	CHKD. BY	
		APPD. BY	
		DWG. NO	