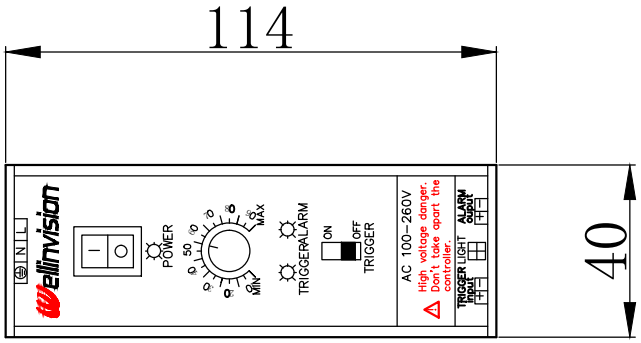

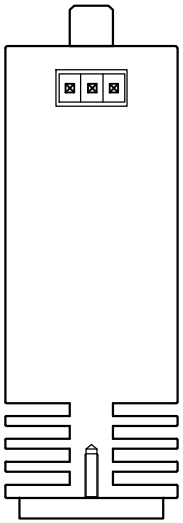

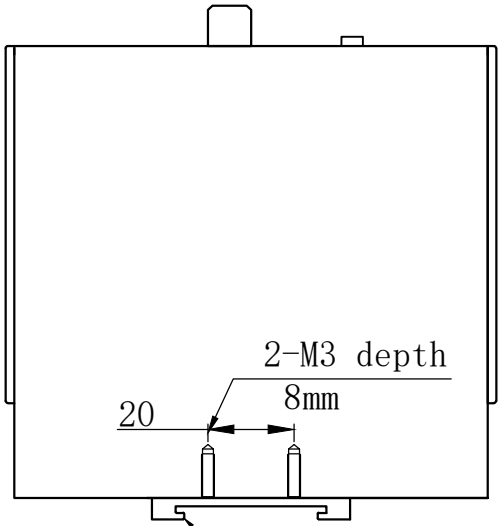

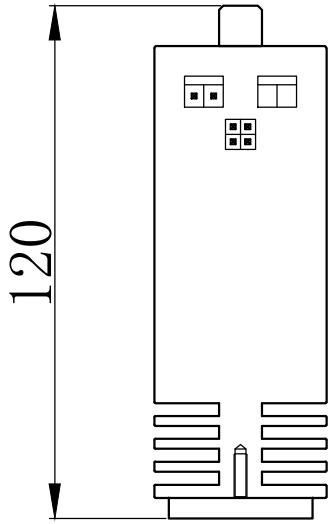

SPECIFICATIONS PARAMETER	
INPUT	AC 110-260V
OUTPUT	DC 24V
CONTRL MODE	Constant current
OUT PORT	4PIN
TRIGGER PORT	3.01 2PIN
ALARM PORT	3.01 2PIN
INPUT PORT	5.08 3PIN
POWER RANGE	60W

wellinvision	PART NAME	HL-PA1-60T- (D)	DATE 2013-9-23
			DWN. BY
	UNIT: mm	TITLE DRAWING LAYOUT	CHKD. BY
			APPD. BY
			DWG. NO