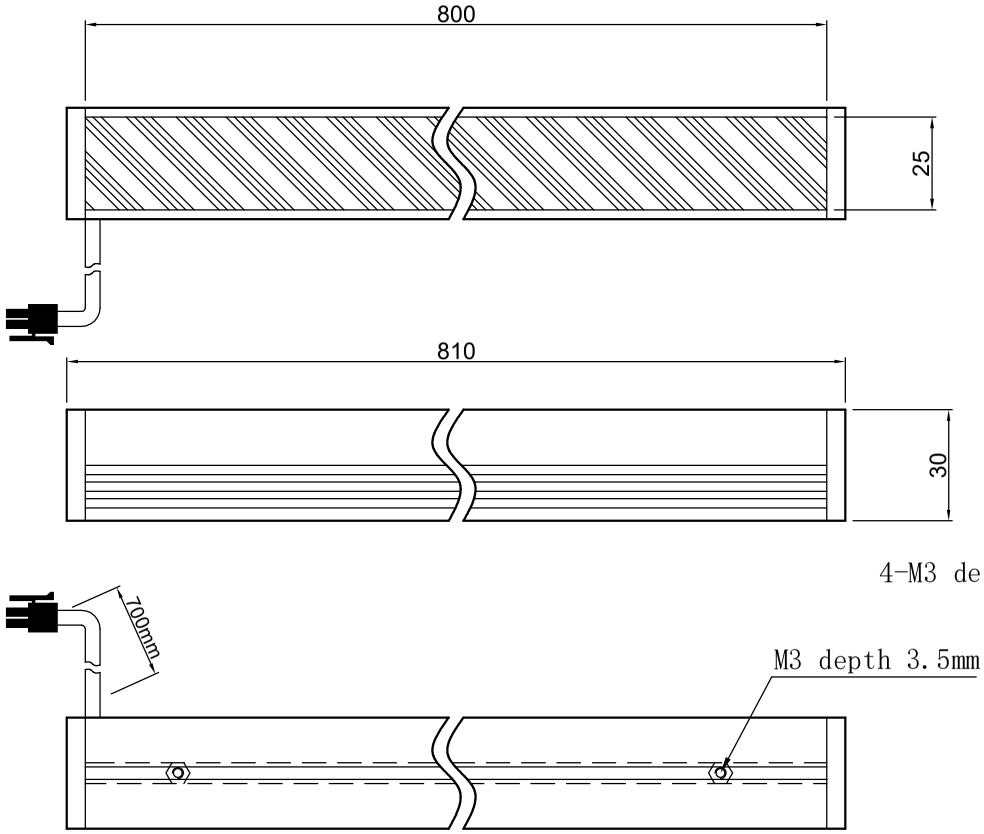

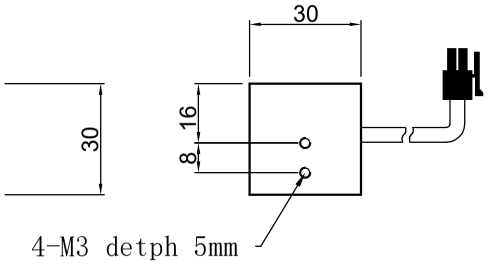

SPECIFICATIONS PARAMETER	
OPERATING VOLTAGE	DC24-26V
RATED CURRENT	R、R/W、G、B 1.53/2.3mA
RATED POWER	R、R/W、G、B 36.8/55.2W
PEAK CURRENT	
PEAK POWER	
WAVELENGTH OF LIGHT	IR 850-940nm
	R 620-625nm
	G 520-530nm
	B 465-470nm
	W 6500-8000K

Wellinvision

PART NAME	HL-LWDH-800	DATE	2013-9-23
		DWN. BY	
UNIT: mm	TITLE DRAWING LAYOUT	CHKD. BY	
		APPD. BY	
		DWG. NO	