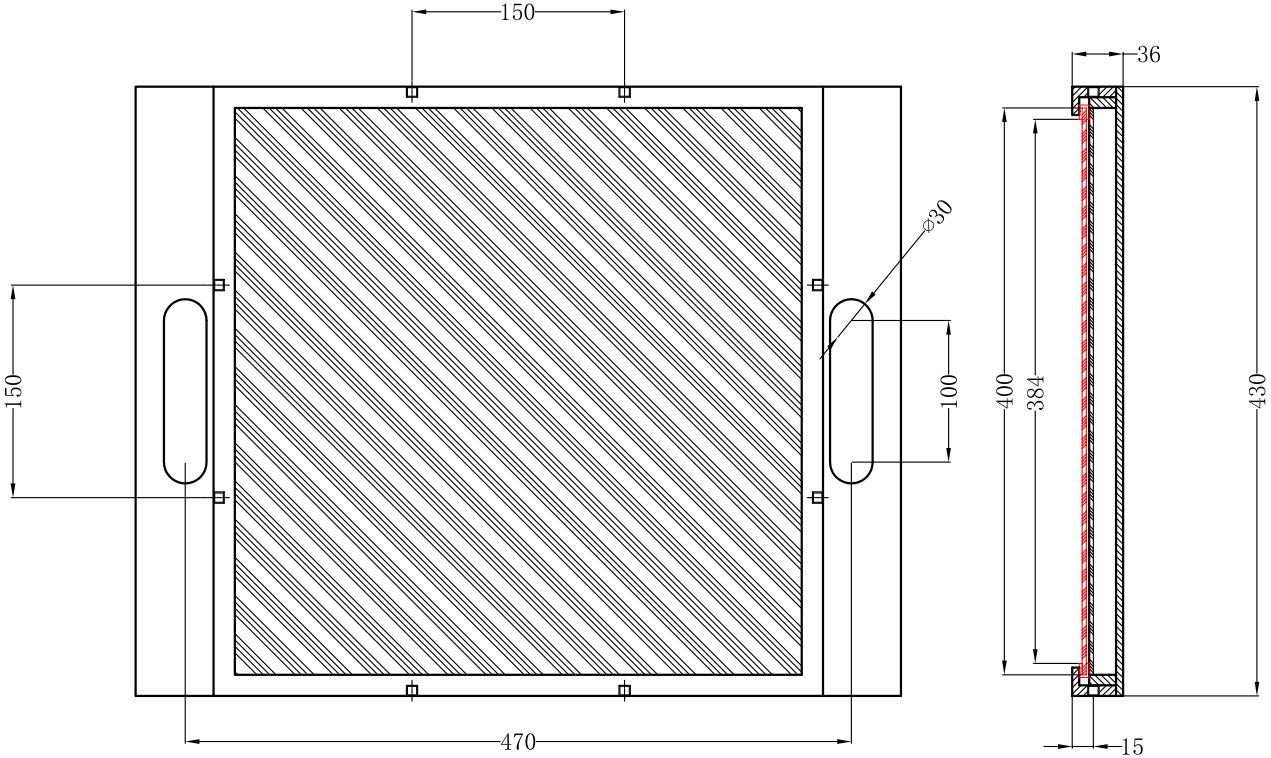

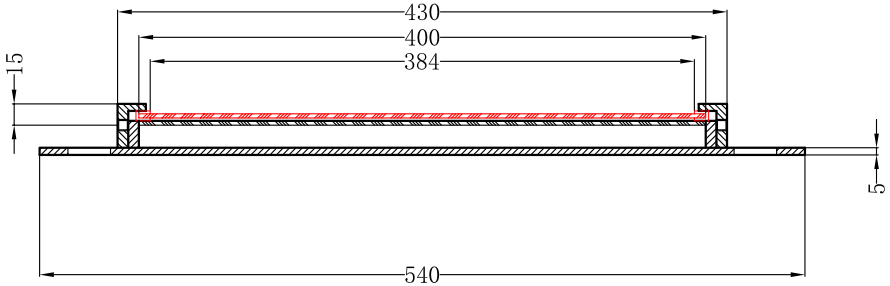

SPECIFICATIONS PARAMETER	
OPERATING VOLTAGE	DC24-26V
RATED CURRENT	2A
RATED POWER	24W
PEAK CURRENT	3800mA
PEAK POWER	92W
WAVELENGTH OF LIGHT	
	W 6500-7000K

Wellinvision

PART NAME	HL-BK-400-400-W-CG	DATE	2015-6-15
		DWN. BY	
UNIT: mm	TITLE DRAWING LAYOUT	CHKD. BY	
		APPD. BY	
		DWG. NO	