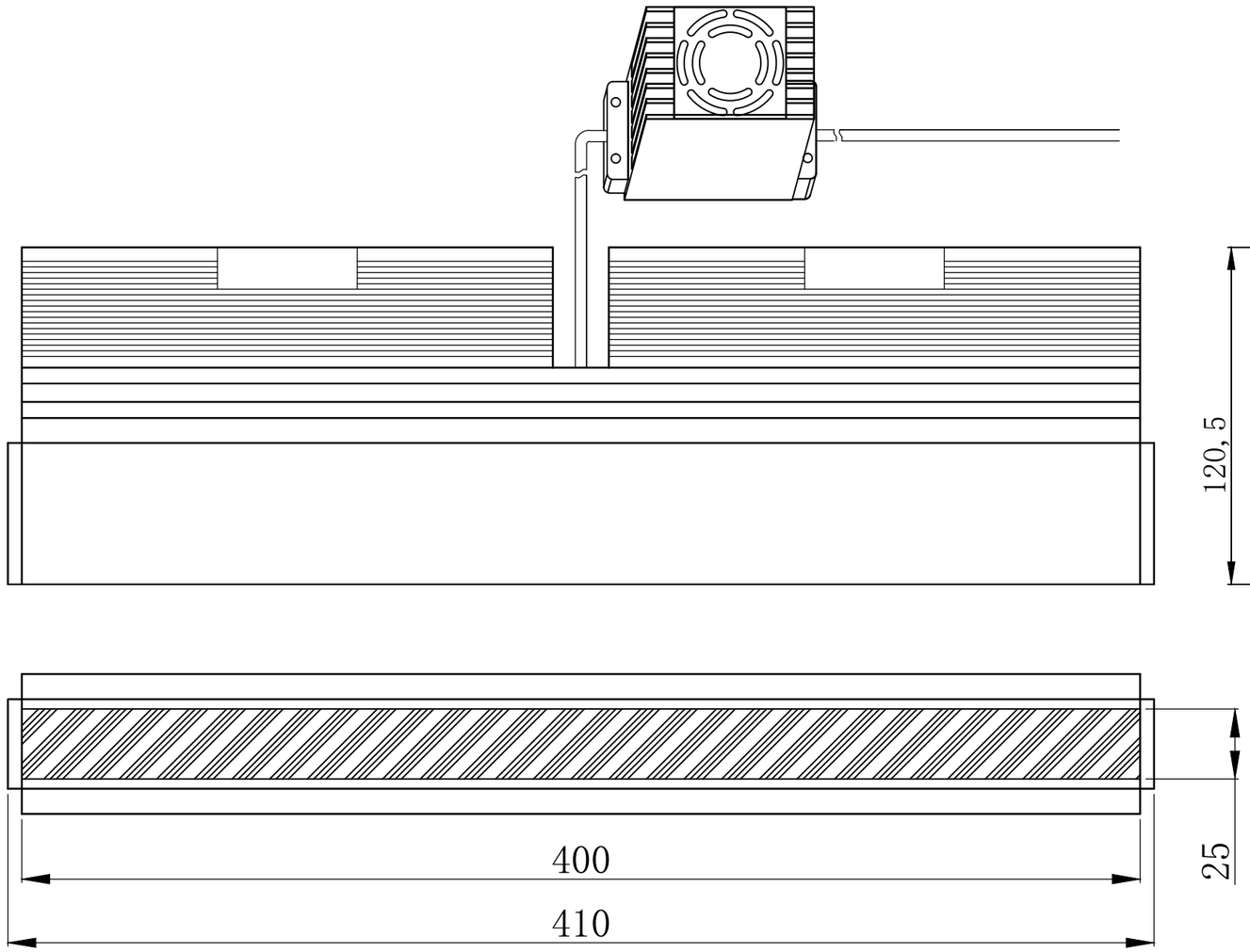

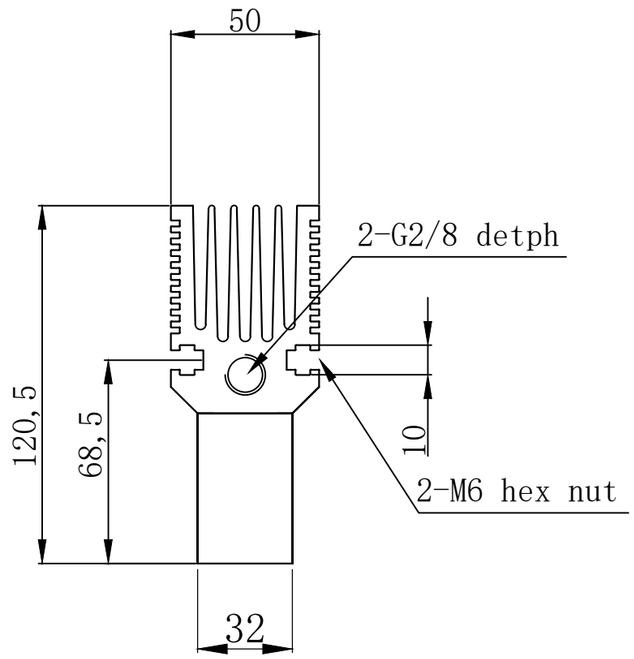

SPECIFICATIONS PARAMETER	OPERATING VOLTAGE		DC24-26V		WAVELENGTH OF LIGHT	IR 850 nm	B 465-470nm
	RATED CURRENT	IR、R/W、G、B、V 4A	PEAK CURRENT	IR、R/W、G、B、V 8A		R 620-625nm	V 365-400nm
	RATED POWER	IR、R/W、G、B、V 96W	PEAK POWER	IR、R/W、G、B、V 192W		G 520-530nm	W 6500-7000K

Wellinvision

PART NAME	HL-HL25(D)F-400	DATE	2017-1-13
		DWN. BY	
UNIT: mm	TITLE DRAWING LAYOUT	CHKD. BY	
		APPD. BY	
		DWG. NO	